3-Phase Switching Amplifier - SA306-IHZ

INTRODUCTION

The SA306-IHZ is a fully-integrated switching amplifier designed primarily to drive three-phase brushless DC (BLDC) motors. Three independent half bridges, each comprising a P-FET and a N-FET in a configuration, provide more than 15 A of PEAK output current under digital control. Thermal and short circuit monitoring is provided, which generates fault signals for the microcontroller to take appropriate action. A block diagram of this IC is provided in Figure 1.

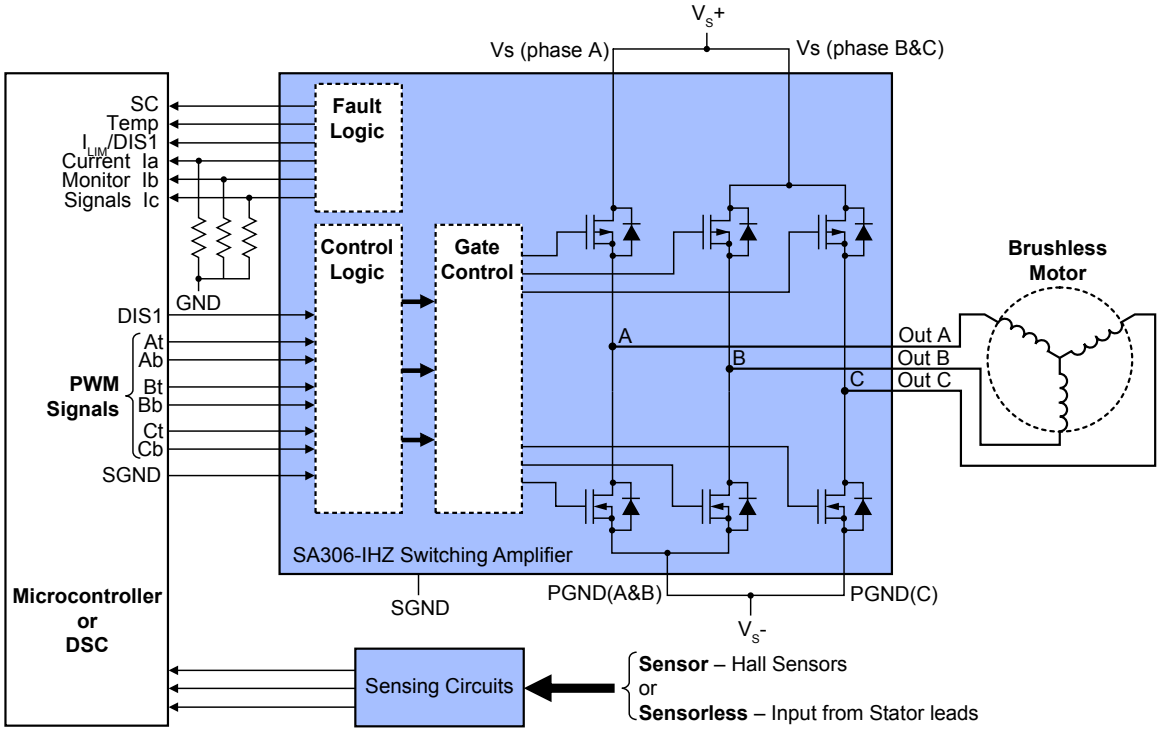

Figure 1. Polarity is Easily Switched – DC-to-DC converter, three terminal module can be switched from a positive to a negative converter by simply interchanging the jumpers identified by Note 2.

DRIVING BRUSHLESS MOTORS

Brushless motors of the same horsepower as their brush counterparts are smaller and lighter. What is absent in the former is the familiar brush–commutator arrangement that has been at the heart of single-phase DC brush motors for more than a century. Because they lack this brush-commutator interface, brushless motors exhibit lower acoustic noise; are virtually maintenance free; and a brushless motor will exhibit a longer life cycle. As recently as 2004, brushless motors were considered to be significantly more expensive than brush motors. At the time of this writing in 2008, brushless motors have benefited from a decrease in cost so that today the price differential is as little as a 10% when shopped against an equivalent brush motor.

CYCLE-BY-CYCLE CURRENT LIMIT – THE BENEFITS

Traditionally, in applications where the current flow to a brushless motor is not otherwise directly controlled, the inrush current had to be considered when selecting a proper driver amplifier. This is in addition to the average current that will flow. As an example, a 1 A continuous motor might require a drive that can deliver well over 10 A PEAK in order to deliver the initial inrush current that flows during startup. Many discrete motor drives use over-sized FETs to withstand startup conditions which results in higher system costs and larger package sizes.

However with the unique and robust cycle-by-cycle current limit scheme designed into the SA306-IHZ, the inrush current requirements of the motor are no longer an issue when selecting the drive. Current limit schemes inherently reduce acceleration of the motor; however, the average current delivered by the SA306-IHZ during start up is higher

than would be delivered by other current limit schemes. By using the SA306-IHZ, the motor will reach its operating RPM faster. Thus the SA306-IHZ is able to safely and easily drive virtually any brushless motor which requires 5 A continuously or less, through its startup interval — without regard to what its in-rush requirements are. (Up to 8 A continuously in the case of the SA306A-FHZ).

SA306-IHZ APPLICATIONS

The SA306-IHZ is designed primarily to drive three-phase motors. However, it can be used for any application requiring three high current outputs. The signal set of the SA306-IHZ is designed specifically to interface with a DSP or microcontroller. A typical system block diagram is shown in Figure 1. As explained below, over-temperature, short-circuit and current limit fault signals provide important feedback to the system controller that can safely disable the output drivers in the presence of a fault condition. High-side current sensors monitor the output current of all three phases, providing performance information that can be used to regulate or limit torque.

A SYSTEM OVERVIEW OF THE SA306-IHZ

With the introduction of the SA306-IHZ, designers now have an off-the-shelf solution for driving BLDC motors versus developing driver circuits by configuring three discrete gate drivers and six FETs. The performance specifications for the SA306-IHZ are unusual in that it can deliver over 15 A PEAK with up to 60 V applied to its FETs[1].

Imparting Rotation – Three independent DMOS FET half bridges pro¬vide the output current. In operation, as the motor rotor revolves, the controller causes one motor terminal to be driven HIGH, a second LOW and the third to FLOAT in a high impedance state, as depicted in Figure 2. This causes the magnetic field to rotate in six steps per electrical revolution in the simplest case, imparting rotation to the permanent magnets in the rotor. Proper synchronization of this sequence is assured by the feedback from either Hall sensors or a sensorless control system that keeps the microcontroller continuously informed of the position of the rotor with regard to the stator windings.

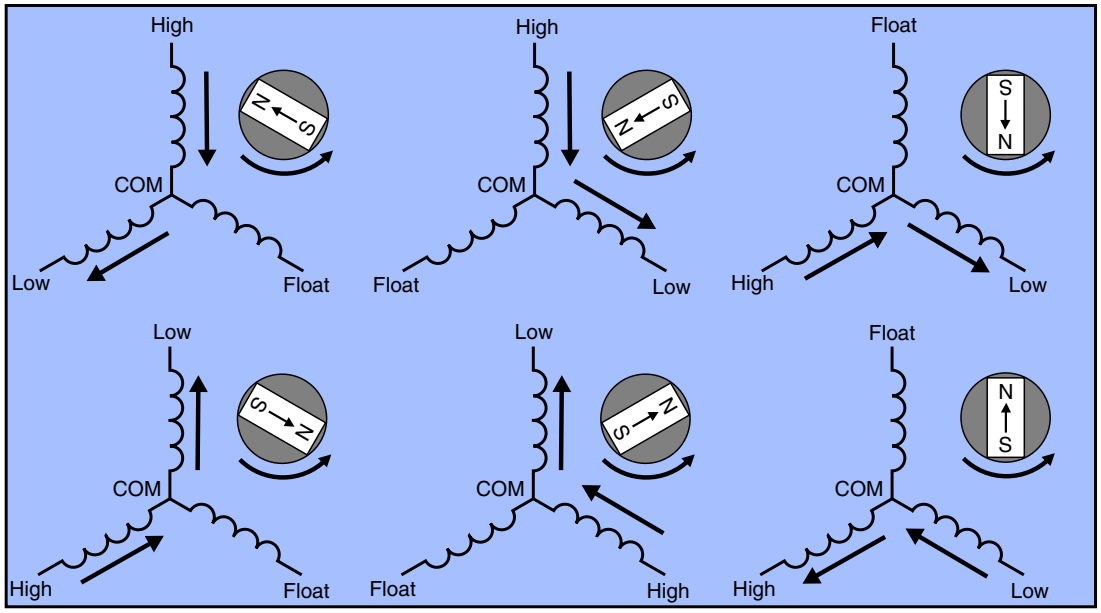

Figure 2. Imparting Rotation – By monitoring the Hall sensors – or by monitoring Back EMF in a sensorless configuration – the stator winding fields can be made to rotate so that the resultant field of the two energized stator windings and the pole of the permanent magnet rotor remain at right angles, thereby maximizing the instantaneous torque.

Shoot-Through Protection – The shoot-through protection feature of this IC identifies the state in which both the upper and lower portions of a half bridge are ON at the same time. Shoot through must be avoided, for if it were to occur, it would short the supply to ground, overload the circuit and destroy the FETs. Consequently, a ‘dead time’ is programmed to allow a FET to turn fully off before its companion FET is turned on. During dead time, inductive winding currents continue to flow, or commutate, through internal or external reverse biased diodes. Fault status

indication and current level monitors are provided directly to the controller. Output currents are measured using an innovative low-loss technique discussed in a later section. The SA306-IHZ also offers superior thermal performance with a flexible footprint.

Controlling Brushless Motor Drivers – Most brushless motor drivers are controlled by microcontrollers or some other intelligent system. A number of manufacturers including Analog Devices, Freescale, Microchip and Texas Instruments market microcontrollers for motion control – and more specifically for driving brushless motors.

Choosing a Brushless Motor – Although there are a number of sources for assistance in choosing a motor, brushless or otherwise, a good starting point is Reference 2. As the author points out, choosing a motor requires looking at a whole list of issues including efficiency, torque, power reliability and cost.

What can be said categorically is that a brushless permanent magnet motor is the highest performing motor in terms of torque versus efficiency. Also all three stator windings can be controlled which is not the case in a traditional DC motor where commutation relies on brushes.

SENSOR VERSUS SENSORLESS COMMUTATION

Hall Sensors are not required in sensorless commutation. Instead the instantaneous position of the rotor relative to the stator is determined by the Back EMF (BEMF) developed in the stator windings. The absence of both the Hall Sensors and the attendant wiring lowers the motor's cost and increases reliability, though deriving the lost information from the BEMF requires somewhat more complex control. This approach is attractive in applications such as refrigeration or HVAC systems which generate heat that could accelerate failures of the Hall Sensors.

On the other hand, starting presents a problem in sensorless commutation simply because there is no BEMF when the motor is at rest. Secondly, abrupt changes in the motor load can cause a BEMF drive loop to go out of synchronization. Central to both sensorless- and sensor-based control systems is the presence of pulse width modulation (PWM) which is discussed in the Appendix.

CYCLE BY CYCLE CURRENT LIMITING – THE FUNDAMENTALS

In applications where the current in the motor is not directly controlled, both the average current rating of the motor and the in-rush current must be considered when selecting a proper drive. For example, a motor that requires 1 A when running at constant speed, might require a drive that can deliver well over 10 A PEAK in order to survive the inrush condition at startup. But as this discussion will make clear, this is not the case when using the SA306-IHZ.

Depicted in Figure 3a is the behavior in a traditional motor where there is no cycle-by-cycle current limit. (This is discussed in more detail in the Appendix)

In this case, when the rotor is not turning (no BEMF), the current is limited only by the resistance of the rotor of the motor plus any series resistance that may be present. As the motor accelerates, the back EMF builds up, gradually reducing the current so that it diminishes to the steady-state current.

Figure 3 illustrates motor behavior when cycle-by-cycle current limit is applied at start-up. In this case, the current is limited by circuitry within the SA306-IHZ – not by the impedance of the rotor. As the motor reaches its steady-state speed, the current tails off.

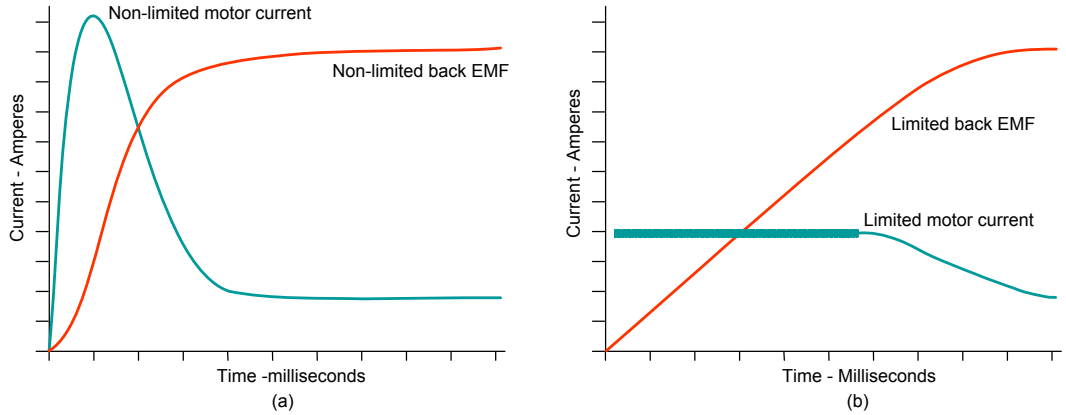

Figure 3. Motor Current Behavior at Startup – (a) Without cycle-by-cycle current limit. (b) With cycle-by-cycle current limit.

CYCLE-BY-CYCLE CURRENT LIMIT BEHAVIOR

Shown along the top of Figure 4 is the cycle-by-cycle behavior of the PWM pulse train applied to the SA306-IHZ by the microcontroller. The motor current is shown in blue at the bottom of the illustration. Outlined in red, and superimposed over the current waveform, is the actual PWM pulse train ('PWM output') delivered by the FETs which has, in effect, been modulated by the current flow. It shuts off the output pulse should the current exceed the 'current limit' set externally by the user.

1st Pulse – In the case of the 1st PWM pulse, no current limiting occurs because the pulse ends before the rising current reaches the current limit threshold. At the end of the 1st pulse there is a short decay before the PWM pulse turns on once more and the current resumes its rise. Note that because current cannot change instantaneously in an inductive reactance, which is, in fact, what the rotor of the brushless motor is, the current value, unlike the PWM voltage, is always continuous.

2nd Pulse – In the case of the second PWM pulse, the current reaches the limit value before the PWM input pulse ends. Consequently, the PWM output pulse is shut off early in its cycle. Then the motor current decays until the third pulse is applied which once again causes the current to rise.

Subsequent pulses – The behavior just described continues until the back EMF rises to the point where the current falls below the current limit threshold. This occurs as the motor approaches its operating speed and the current descends to its steady state value, as depicted in Figure 3b. The ratio of the peak-to-average motor current depends on the inductance of the motor winding, the back EMF developed in the motor, mechanical loading of the systems and the width of the pulse.

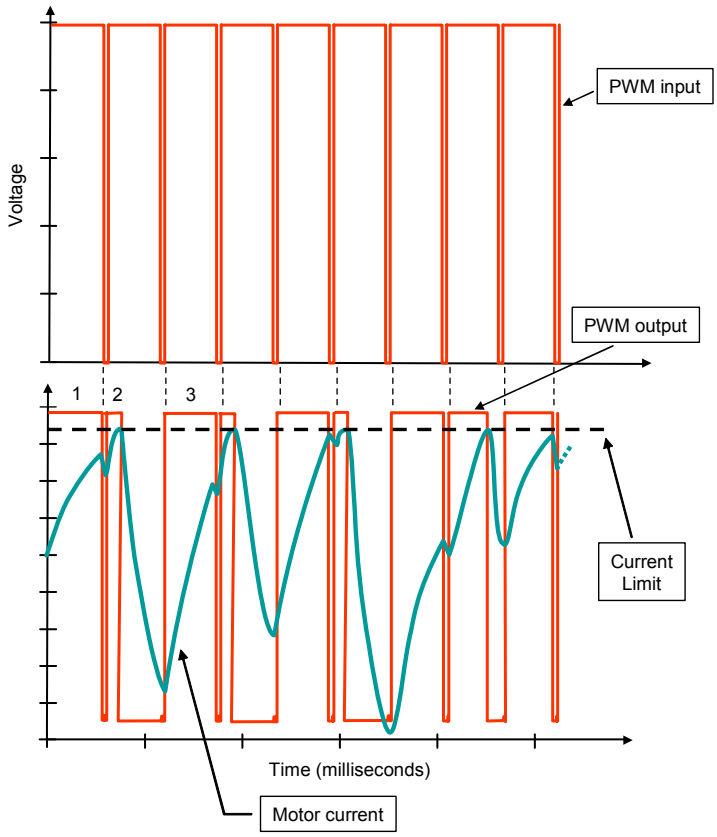

Figure 4. Cycle by Cycle Current Limit

CONTROL AND SENSE ARCHITECTURE

As depicted in Figure 5, the output current of the upper output FET U14 for OUT A is continually measured, (The same occurs for the corresponding output FETs for OUT B and OUT C). The output of the current sense circuit is applied to a current mirror comprising U1, U2 and U3 which develops a voltage across the external current limit resistor. This voltage is compared with the current limit threshold by Comparator U6.

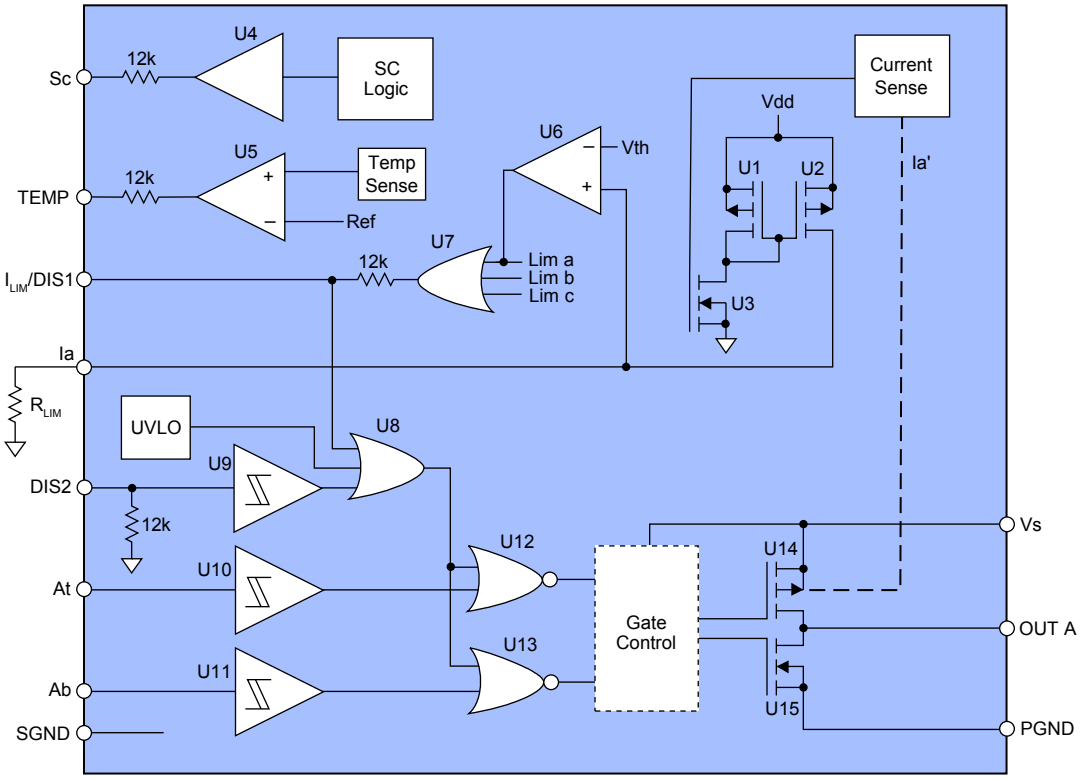

Figure 5. Control and Sense Architecture

Disabling Circuitry – If the voltage applied to the plus terminal of comparator U6 exceeds the current limit threshold voltage (Vth), all three outputs OUT A, OUT B and OUT C are disabled. The disabling path is via gates U7 and U8 and gates U12 and U13. Once the voltage applied to Comparator U6 falls below the Vth threshold voltage, and the disabled top side input to the gate control goes low, the output stage will return to an active state on the rising edge of any top side input command signal (At, Bt, or Ct). Note that the corresponding disable signals from phases B and C are also applied via gate U7 and their behavior is exactly the same as is the case for OUT A. Also the ILIM/DIS1 goes HIGH when any of the three current sense circuits detects an overcurrent situation. The cycle-by-cycle current limit feature of the SA306-IHZ will reset each PWM cycle. Thus the PEAK current is limited in each phase during each PWM cycle, as illustrated in Figure 4. Notice also that the moment at which the current sense signal exceeds the Vth threshold is asynchronous with respect to the input PWM signal because this event is governed by the intersection of the rising current with the current limit – not the PWM duty cycle. The difference between the PWM period and the motor winding L/R time constant will often result in an audible beat frequency sometimes called a 'sub-cycle oscillation'. This oscillation can be viewed with an oscilloscope by applying a probe to pin 7, I_{LIM}/DIS1.

Undervoltage Lockout – See Table 1 and Page 7.

Limitations at High and Low Speeds – Input signals applied to the PWM and commanding a 0%- or a 100%-duty cycle, may be incompatible with the current limit feature due to the absence of rising edges of At, Bt, and Ct – except at instances when the rotation of the motor requires the output FETs to change states. At high motor speeds, this may result in poor performance and significantly increased torque ripple. Whereas at low motor speeds the motor may stall if the current limit trips and the motor current reaches zero without a commutation edge that would change the state of the output FETs and normally reset the current limit latch.

Disabling Cycle-by-Cycle Current Limit – The current limit feature may be disabled by pulling the I_{LIM}/DIS1 pin to GND. The current sense circuitry identified in Figure 5, will continue to provide top FET output current information.
External Current Control Options – Typically the current sense pins source current into grounded resistors which provide voltages to the current limit comparators, as shown in Figure 1. If instead the current limit resistors are connected to a voltage output DAC, the current limit can be controlled dynamically by the system controller. This technique essentially reduces the current limit threshold voltage to (Vth-VDAC). During expected conditions of high torque demand, such as start-up or reversal, the DAC can adjust the current limit dynamically to allow periods of high current. In normal operation when a low current is expected, the DAC output voltage can increase, reducing the current limit setting to provide more conservative fault protection. This is discussed in detail under 'Current Sense – An Advantage'.
Three Degrees of Freedom – The applied voltage, the switching frequency and the PWM duty cycle are three crucial parameters that can be programmed independently. How these variables are selected will affect the behavior of the motor with regard to how fast it will accelerate, and consequently how fast its speed and torque will rise.

CONTROL AND SENSE PINS

A summary of the control and sense pins, and their functions, is supplied in Table 1.

Table 1. Control and Sense Features

Nomenclature	Pin #	Function	Description	Remarks
DIS2	23	Control	When a HIGH is applied to this Schmitt triggered logic level, it places OUT A, OUT B, and OUT C in a high impedance state.	Pin DIS2 (23) has an internal 12kΩ pull-down resistor connected to ground and therefore may be left unconnected. (See Figure 5.)
I_{LIM}/DIS1	7	Control/Sense	Control: Pulling this pin to logic HIGH places OUT A, OUT B, and OUT C in a high impedance state. Pulling this pin to a logic LOW effectively disables the cycle-by-cycle current limit feature. Sense: This pin is also connected internally to the output of the current limit latch through a 12kΩ resistor and can be monitored to observe the function of the cycle-by-cycle current limit feature.	
SC	3	Sense	Goes HIGH if a short circuit is detected or an output occurs that is not in accordance with the input commands,	The SC signal is blanked for approximately 200 ns during switching transitions but in high current applications, short glitches may appear on the SC pin. A high state on the SC output will not automatically disable the device. The SC pin includes an internal 12kΩ series resistor, as shown in Figure 5.
TEMP	25	Sense	Goes HIGH if the SA306 die temperature reaches approximately 135ºC.	This pin WILL NOT automatically disable the device. The TEMP pin includes a 12kΩ series resistor. See Figure 5.

Nomenclature	Pin #	Function	Description	Remarks
UVLO (Under-voltage Lock Out)	None	Control/Sense	Disables all output FETs until V_S is above the UVLO threshold voltage which is typically 8.3 V.	See discussion in Section 3.4.
Vth	None	Control	If the voltage of any of the three current sense pins exceeds the current limit threshold voltage (Vth),which is typically 3.75 volts, all outputs are disabled. After all current sense pins fall below the Vth threshold voltage and the offending phase's top side input goes low, the output stage will return to an active state on the rising edge of ANY top side input command signal (At, Bt, or Ct).	

FAULT INDICATIONS

In the case of either an over-temperature or short-circuit fault, the SA306-IHZ will take no action to disable the outputs. However, the SC and TEMP signals can be fed to an external controller, as depicted in Figure 6, where a determination can be made regarding the appropriate course of action. In most cases, the SC pin would be connected to a FAULT input on the processor, which would immediately disable its PWM outputs. The TEMP fault does not require such an immediate response, and would typically be connected to a GPIO, or Keyboard Interrupt pin of the processor. In this case, the processor would recognize the condition as an external interrupt, which could be processed in software via an Interrupt Service Routine. The processor could optionally bring all inputs low, or assert a high level to either of the disable inputs on the SA306-IHZ. Figure 6 depicts an external SR flip-flop which provides a hard wired shutdown of all outputs in response to a fault indication. An SC or TEMP fault sets the latch, pulling the DIS2 pin HIGH. The processor clears the latched condition with a GPIO. This circuit can be used in safety critical applications to remove software from the fault-shutdown loop, or simply to reduce processor overhead. In applications which may not have available GPIO, the TEMP pin may be externally connected to the adjacent I_{LIM}/DIS1 pin. If the device temperature reaches ~135ºC all outputs will be disabled, de-energizing the motor. The SA306-IHZ will re-energize the motor when the device temperature falls below approximately 95ºC. The TEMP pin hysteresis is wide to reduce the likelihood of thermal oscillations that can greatly reduce the life of the device.

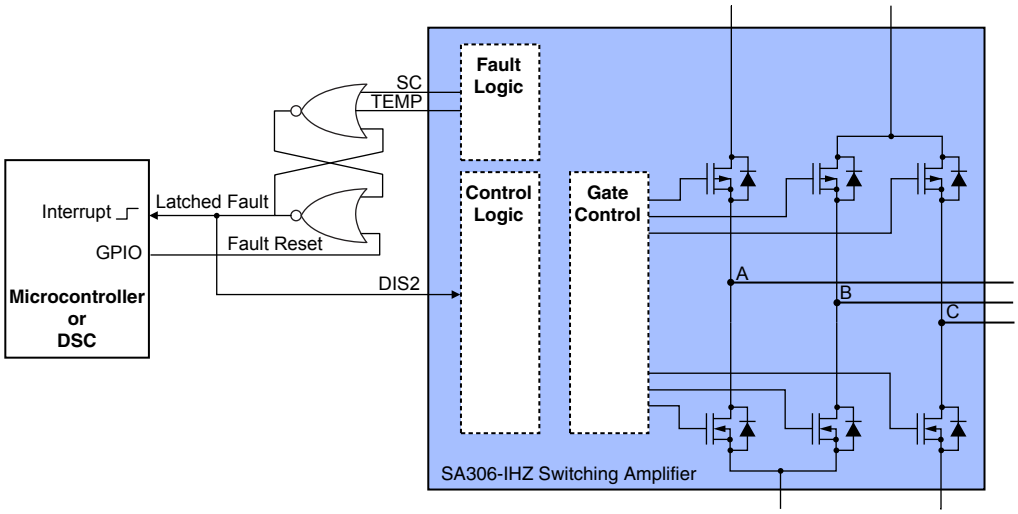

Figure 6. External Latch Circuit

UNDER-VOLTAGE LOCKOUT

Without sufficient supply voltage, the SA306-IHZ control circuit cannot sufficiently drive the gates of the output FETs. The undervoltage lockout condition results in the SA306-IHZ unilaterally disabling all output FETs until V_S is above the UVLO threshold indicated in the specification table in the Data Sheet[1]. There is no external signal indicating that an undervoltage lock-out condition is in progress. The SA306-IHZ has two V_S connections: one for phase A, and another for phases B & C. The supply voltages on these pins need not be the same, but the UVLO will engage if either is below the threshold. Hysteresis on the UVLO circuit prevents oscillations with typical power supply variations.

CURRENT SENSE — AN ALTERNATIVE

External power shunt resistors are not required with the SA306-IHZ. Forward current in each top, P-channel output FET is measured and mirrored to the respective current sense output pin, Ia, Ib and Ic, as depicted in Figures 1 and 5. By connecting a resistor between each current sense pin and a reference, such as ground, a voltage develops across the resistor that is proportional to the output current for that phase. As an alternative the currents Ia, Ib, and Ic can be fed to a single resistor and the voltage developed monitored by a high-impedance A/D converter, as shown in Figure 7.

As depicted in the 'Current Sense' plot on page 4 of the SA306-IHZ product data sheet, the maximum current per phase is slightly less than 2 milliamperes. Consequently, choose a resistor that will develop the voltage appropriate for the A/D Converter chosen. The full scale voltage will be the voltage developed across the resistor by the sum of the three currents — 6 milliamperes. Also allow a headroom of approximately 0.5 V.

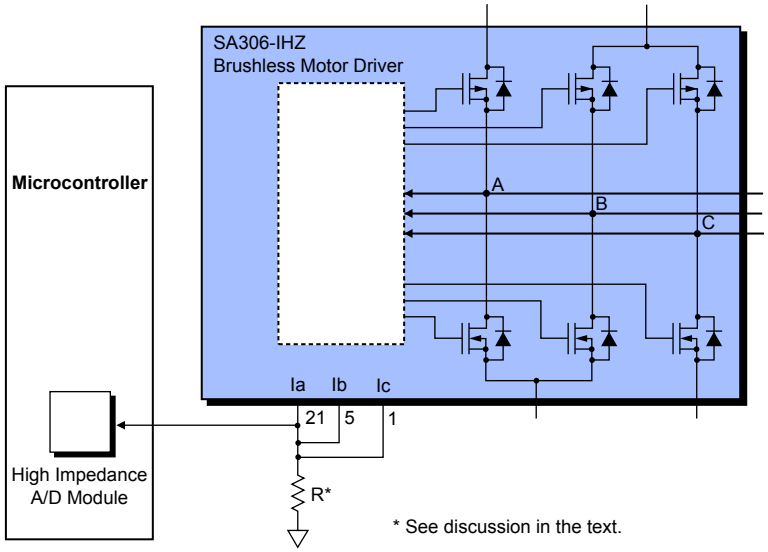

Figure 7. Current Monitoring Circuit

EXTERNAL FLYBACK DIODES

External fly-back diodes (D1 through D6), depicted in Figure 8, will offer superior reverse recovery characteristics and lower forward voltage drop than the internal back-body diodes. In high current applications, external flyback diodes can reduce power dissipation and heating during commutation of the motor current. Reverse recovery time and capacitance are the most important parameters to consider when selecting these diodes. Ultra-fast rectifiers offer better reverse recovery time and Schottky diodes typically have low capacitance. Individual application requirements will be the guide when determining the need for these diodes and for selecting the component which is most suitable.

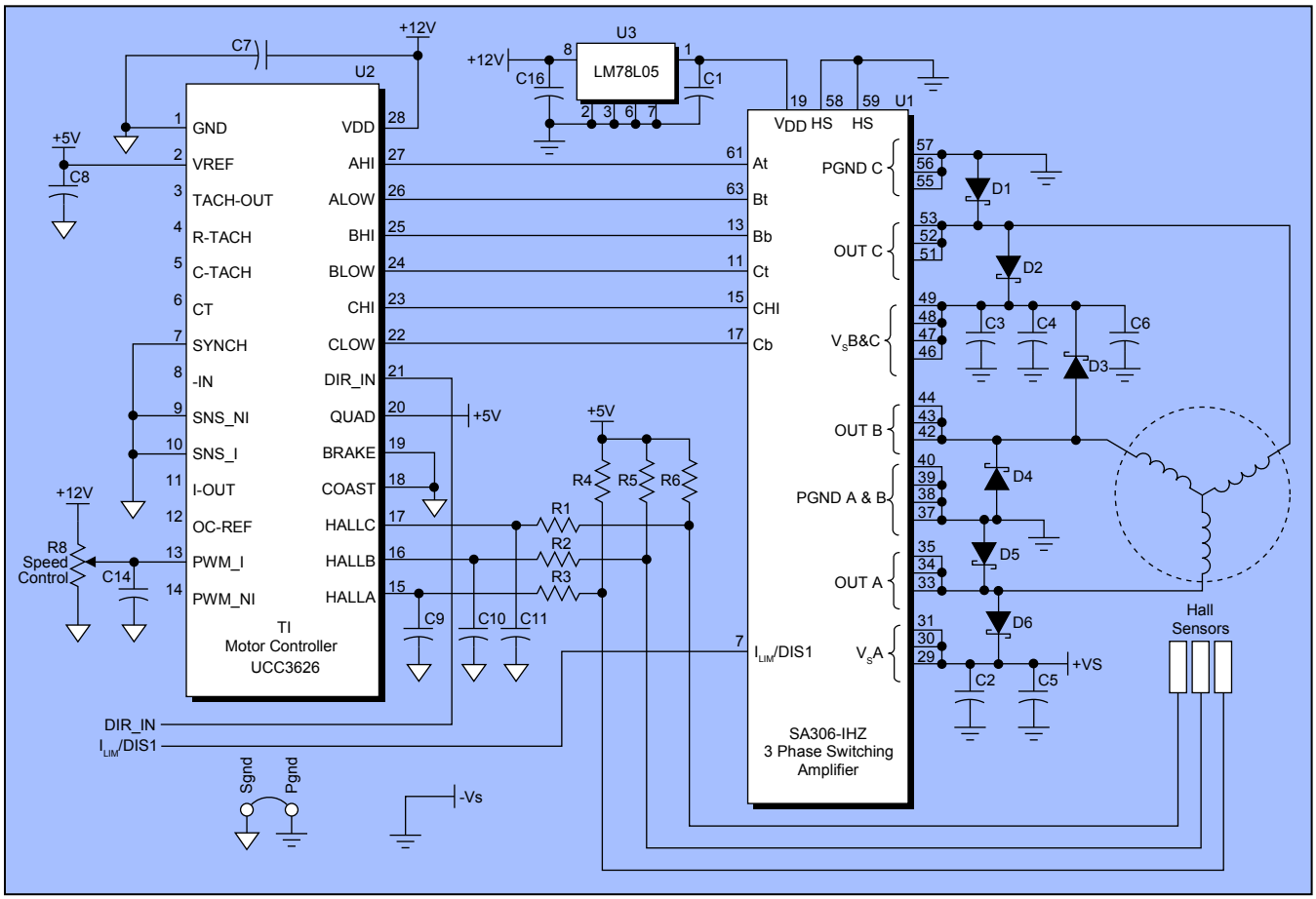

Figure 8. Three-Phase Motor Drive Circuit

A SPECIFIC EXAMPLE

Begin by choosing a motor that will exhibit the mechanical performance required — which is to say the torque, the efficiency, and other issues that will fulfill the motor drive requirements of your system. We have chosen as our example a low-inertia, brushless motor that delivers 557 mNm of torque at 2000 rpm. We selected a Maxon EC Flat motor www.maxonmotor.com. The characteristics of the windings of this motor are that any stator-winding pair exhibits a resistance (Rm) of 2.3 ohms and an inductance (Lm) of 2.5 millihenries. The torque constant (Kt) of the motor is 217 mMm oz-in/A.

DEMONSTRATION BOARD FOR THE SA306-IHZ

It is recommended that the designer acquire the DB64 Demonstration Board[3] and assemble a prototype. In the DB64 the SA306-IHZ input PWM control is achieved by means of a Texas Instrument on-board UCC3626 PW microcontroller[4]. The DB64 is designed to demonstrate the capabilities of the SA306-IHZ as a 3-phase brushless DC motor driver IC. From there one can easily convert the circuit developed with the DB64 Demonstration Board into a circuit similar to the one shown in Figure 8 which can serve as the base circuit for a production version.

LAYOUT CONSIDERATIONS

A simple two-layer printed circuit board construction is sufficient because of the convenient pinout of the SA306-IHZ PowerQuad package. Input signals are routed into one side of the SA306-IHZ package and high-power output signals are routed from the other side in 2 ounce copper. This eliminates the need to route control signals near motor connections where noise might corrupt the signals. Filling top and bottom layers with copper reduces inductive coupling from the high current outputs. Use 1 nF capacitors with excellent high frequency characteristics to bypass the V_S motor supplies at each phase as well as switching grade electrolytic capacitors. The six 100 V Schottky diodes (D1 – D6) conduct the commutation current via low forward voltage paths which reduces the power dissipation in the SA306-IHZ. These diodes are rated for 5 A continuous. Mount them close to the SA306-IHZ to reduce inductance in the commutating current loop. For applications with continuous currents less than 5 A, the Schottky diodes may not be necessary, but one must consider the higher forward voltage internal body diodes and the associated power dissipation that results.

Output Traces – Output traces carry signals with very high dV/dt and dI/dt. Proper routing and adequate power supply bypassing ensures normal operation. Poor routing and bypassing can cause erratic and low efficiency operation as well as ringing at the outputs.

Bypassing – The V_S supply should be bypassed with a surface mount ceramic capacitor mounted as close as possible to the V_S pins. Total inductance of the routing from the capacitor to the V_S and GND pins must be kept to a minimum to prevent noise from contaminating the logic control signals. A low ESR capacitor of at least 25 µF per ampere of output current should be placed near the SA306-IHZ as well. Capacitor types rated for switching applications are the only types that should be considered. Note that phases B & C share a V_S connection and the bypass recommendation should reflect the sum of B & C phase current. The bypassing requirements of the V_{DD} supply are less stringent, but still necessary. A 0.1 µF to 0.47 µF surface mount ceramic capacitor (X7R or NPO) connected directly to the V_{DD} pin is sufficient.

Ground Connections and Ground Planes – S_{GND} and P_{GND} pins are connected internally. However, these pins must be connected externally in such a way that there is no motor current flowing in the logic and signal ground traces as parasitic resistances in the small signal routing can develop sufficient voltage drops to erroneously trigger input transitions. Alternatively, a ground plane may be separated into power and logic sections connected by a pair of back-to-back Schottky diodes. This isolates noise between signal and power ground traces and prevents high currents from passing between the plane sections. Unused area on the top and bottom PCB planes should be filled with solid or hatched copper to minimize inductive coupling between signals. The copper fill may be left unconnected, although a ground plane is recommended.

Table 2. Parts List for Figure 7

Reference Designation	Description
R1, R2, R3	470 Ω
R4, R5, R6	1 kΩ
R8	20 kΩ potentiometer (to control the PWM duty cycle)
R9, R10, R14, R15, R16, R17	5 kΩ
C1, C7, C8	1 µF
C2, C3, C4, C5, C6	1 nF
C9, C10, C11	2.2 nF
C14, C16	0.1 µF
D1, D2, D3, D4, D5, D6	PDS5100
U1	Apex Microtechnology SA306-IHZ or SA306A-FHZ
U2	Texas Instrument UCC3626
U3	LM78L05

POWER DISSIPATION

The thermally-enhanced package of the SA306-IHZ allows for several options for managing the power dissipated in the three output stages. Power dissipation in traditional PWM applications is a combination of output power dissipation and switching losses. Output power dissipation depends on the quadrant of operation and whether external flyback diodes are used to carry the reverse or commutating currents.

Switching losses are dependent on the frequency of the PWM cycle as described in the typical performance graphs. The size and orientation of the heatsink must be selected to manage the average power dissipation of the SA306-IHZ. Applications vary widely and various thermal techniques are available to match the required performance. The patent pending mounting technique shown in Figure 9, with the SA306-IHZ inverted and suspended through a cutout in the PCB, is adequate for power dissipation up to 17 W with the HS33 (a 1.5-inch long aluminum extrusion with four fins). In free air, mounting the PCB perpendicular to the ground, so that the heated air flows upward along the channels of the fins can provide a total $\theta_{J\text{-}A}$ of less than 14º C/W (9 W max average PD). Mounting the PCB parallel to the ground impedes the flow of heated air and provides a $\theta_{J\text{-}A}$ of 16.66º C/W (7.5 W max average PD). For applications in which higher power dissipation is expected or lower junction or case temperatures are required, a larger heatsink or circulated air can significantly improve the performance. Also see References 5 and 6.

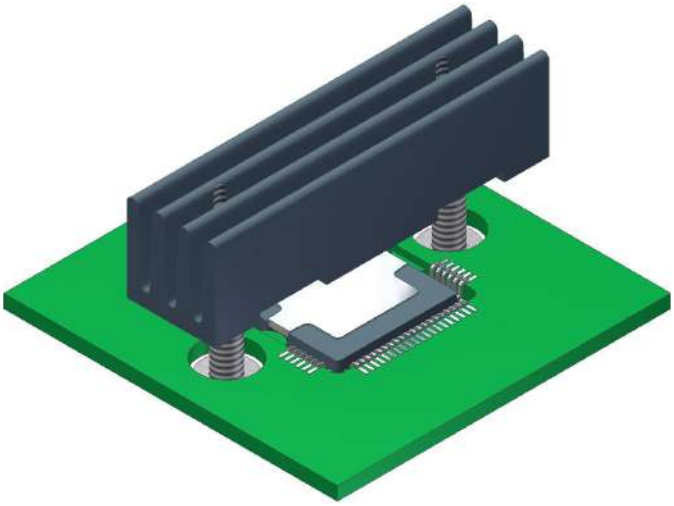

Patent Pending

Figure 9. HS33 Heatsink

Appendix

A Brief Overview of PWM

The first pulse width modulation (PWM) ICs appeared on the market some 40 years ago. So the concept of PWM is at least as old. Though the earliest applications were in switching power supplies, it was not much later that the technique was first employed to drive brushless motors. The principal benefit of PWM as a control technique becomes clear by examining Figure A1. The traditional linear power delivery technique for limiting power simply employs a variable resistance as depicted in Figure A1(a). When maximum output is commanded, the driver reduces resistance of the pass element to a minimum. At this output level, losses in the linear circuit are relatively low. When zero output is commanded the pass element resistance again approaches infinity and losses again approach zero. However, the disadvantage of the linear circuit becomes clear in the midrange when the output level is in the vicinity of 50%. At these levels the resistance of the pass element is equal to the load resistance which means the heat generated in the amplifier is equal to the power delivered to the load! In other words, a linear control circuit exhibits a worst case efficiency of 50% when driving resistive loads at midrange power levels. What's more, when the load is reactive, this efficiency drops even further.

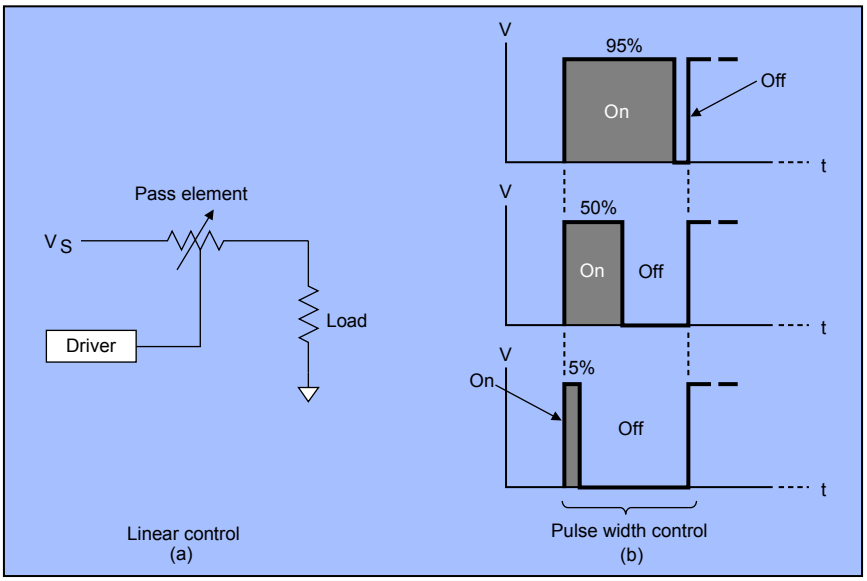

Figure A1. PWM versus Linear Control – PWM control in (b) exhibits far lower losses than the traditional linear control technique in (a)

Now consider PWM operation as depicted in figure A1(b). In a PWM control system an analog input level is converted into a variable-duty-cycle switch drive signal, The process of switching from one electrical state to another, which in this case is simply between OFF and ON, is called ‘modulation’, which accounts for why this technique is called ‘pulse width modulation’. Beginning at zero duty cycle, which is to say OFF all the time, the duty cycle is often advanced as the motor begins to rotate, until it is running at the speed and/or the torque required by the application. In the case of a PWM control circuit, the rather negligible losses are primarily due to the ON resistance of the switching FET and the flyback diode which is why efficiencies as high as 80% to 95% are routine. However, at high switching frequencies the energy required to turn the FETs on and off can become significant.

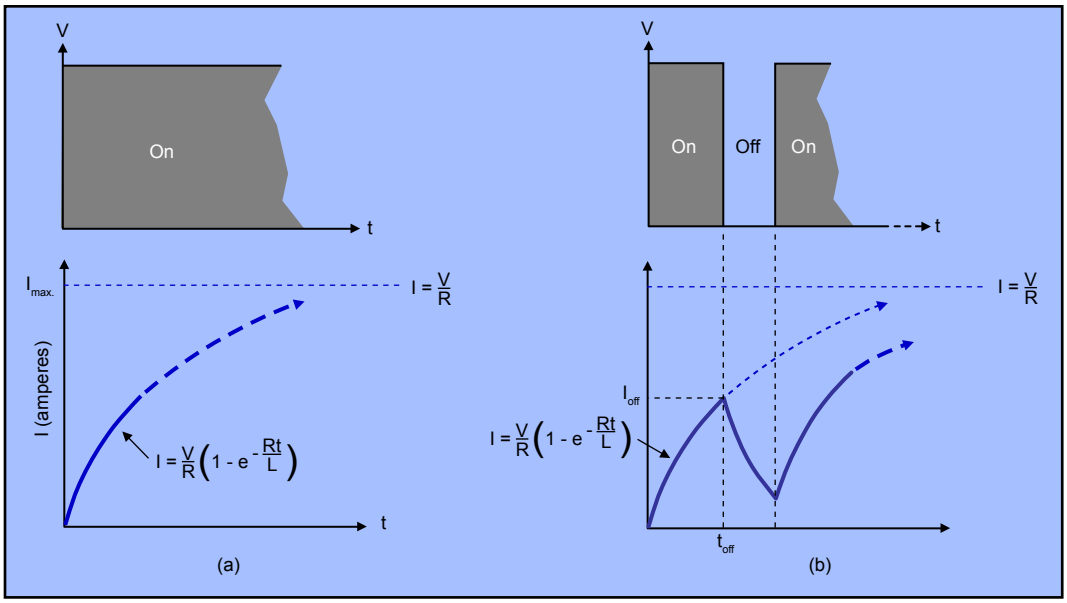

Figure A2. Linear versus PWM — Current behavior with a steady-state excitation in (a); Current behavior with PWM excitation in (b)

In addition to enhanced efficiency, PWM can play additional roles which include limiting the start-up current, controlling speed and controlling torque. The optimum switching frequency will depend on inertia and inductance of the brushless motor chosen and the application. The choice of the switching frequency affects both losses and the magnitude of the ripple current. A good rule of thumb is that raising the switching frequency increases the PWM losses. On the other hand, lowering the switching frequency limits the bandwidth of the system and can raise the heights of the ripple current pulses to the point that they become destructive or shut down the brushless motor driver IC. The ripple current pulses are depicted in Figure A2(a) and are discussed below.

BRUSHLESS MOTOR BEHAVIOR – AN OVERVIEW

One of the most critical moments with regard to a brushless motor – also true for a motor with brushes – is when power is first applied while the motor is at rest. At this time the rotor is stationary and is delivering no 'back EMF' (V_{BEMF}). V_{BEMF} can be expressed as:

$$V_{BEMF} = (K_b)(\text{Speed}) \qquad \text{(Equation1)}$$

Where: K_b = voltage constant (volts/1000 RPM)
Speed = revolutions per minute (expressed in thousands)

Once a voltage is applied to the motor, the rotor begins turning, generating a V_{BEMF} governed by (Equation 1). Ignore for the moment that the plan is to drive the motor with a PWM source, and assume the motor is driven by a steady-state voltage, then we can express the current by this equation:

$$I = [(V-V_{BEMF})/R_m][1-e^{-Rmt/Lm}] \qquad \text{(Equation 2)}$$

Where: V = the applied voltage
V_{BEMF} = back EMF
R_m = stator resistance (winding pair)
L_m = stator inductance (winding pair)

Note that in (Equation 2), the current (I) at any moment is a function of both the back EMF (V_{EMF}) and the time (t). The current when the motor is stopped (V_{BEMF} = 0) is illustrated in Figure A2(a) and is a familiar waveform for characterizing the current in any L-R circuit with its rise time governed by the time constant L/R.
Now let's exchange the steady-state excitation voltage for a PWM source, as shown in Figure A2(b). The current rises until the first ON pulse ends; when the voltage abruptly falls to zero at the end of the first applied voltage pulse, the current begins to decay towards zero. However, the next pulse will again drive the current upwards, and so forth, so that the current continues to rise. As the motor accelerates, the current waveform will exhibit a sawtooth profile. This sawtooth characteristic is also known as ripple. Because torque is directly proportional to current, the sequence of rising current pulses drive the motor, which develops a corresponding torque that accelerates the motor. But this is not so in the case of cycle-by-cycle current limit. Because in this case the current rise ceases immediately if the current reaches the limit value during any PWM pulse interval.

REFERENCES

1. *SA306-IHZ Pulse Width Modulation Amplifier Data Sheet*, www.apexanalog.com
2. *Motion Control Primer* by David Palombo, www.aveox.com
3. *DB64 Demonstration Board For SA306EX*, www.apexanalog.com
4. *UCC2626, UCC3626 Brushless DC Motor Controller*, www.ti.com
5. Application Note 22, *SOA (Safe Operating Area) and Load Lines*, www.apexanalog.com
6. Application Note 11, *Thermal Techniques*, www.apexanalog.com

BIBLIOGRAPHY

"Modeling, Simulation, and Analysis of Permanent-Magnet Motor Drives, Part II: The Brushless DC Motor Drive" by Pragasen and Ramu Krishnan, *IEEE Transactions on Industry Applications*, Vol. 25, No. 2, March/April 1989, pages 274-279

"A New Simulation Model of BLDC Motor with Real Back EMF Waveform" by Y.S. Jeon, H.S. Mok, G.H. Choe, D.K. Kim, J.S. Ryu, *7th Workshop on Computers in Power Electronics, 2000*; pages 217-220

NEED TECHNICAL HELP? CONTACT APEX SUPPORT!

For all Apex Microtechnology product questions and inquiries, call toll free 800-546-2739 in North America.
For inquiries via email, please contact apex.support@apexanalog.com.
International customers can also request support by contacting their local Apex Microtechnology Sales Representative.
To find the one nearest to you, go to www.apexanalog.com